Name: Solutions score:_____ / 10

There are 10 points possible on this quiz. No aids (book, notes, etc.) are permitted. You may use a non-programmable calculator. **Show all work and supporting calculations for full credit. Explain how you get your answers.**

1. (5 pts.) Recall Kruskal's algorithm roughly says the following:

   Kruskal's Algorithm Select the cheapest edge in the graph that does not create a circuit. Stop when a spanning tree is obtained.

   Use Kruskal's Algorithm to find a minimum weight spanning tree in the graph below. Break ties by choosing the alphabetically earliest edge first.

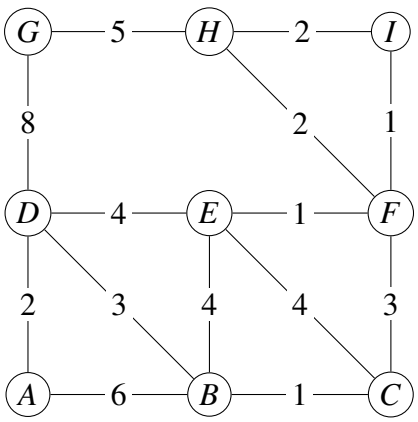

used?	edges	weights
✓	BC	1
✓	EF	1
✓	FI	1
✓	AD	2
✓	FH	2
✗	HI	2
✓	BD	3
✓	CF	3
✗	BE	4
✗	CE	4
✗	DE	4
✓	GH	5
	AB	6
	DG	8

Draw the minimum weight spanning tree below.

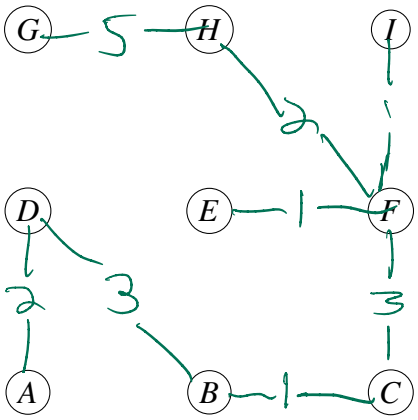

What is the total weight of the spanning tree you found? 18

2. Recall Dijkstra's algorithm roughly says the following:

   Dijkstra's Algorithm

   (i) Mark the ending vertex with a distance of zero and label it as **current**.
   (FYI: Once a **current** vertex is explored, it will be labelled **visited** and never considered again.)

   (ii) Let v be the current vertex. For every vertex w with an edge to v **not marked as visited**, calculate the distance from w to e through v. If this distance is smaller than the present distance, update w with the new distance. Otherwise, do nothing.
   (FYI: This number is called the tentative distance to e.)

   (iii) Mark the current vertex as **visited.** Never look at this vertex again.

   (iv) Identify the **un-visited** vertex with the smallest distance to e. Mark it as current and return to step (ii). You know when to stop when vertex s is labeled as **current**.

   Use Dijkstra's Algorithm to determine the shortest (weighted) distance from vertex A to vertex ~~I~~. G

   Keep track of the steps of the algorithm in the table to the right of the graph

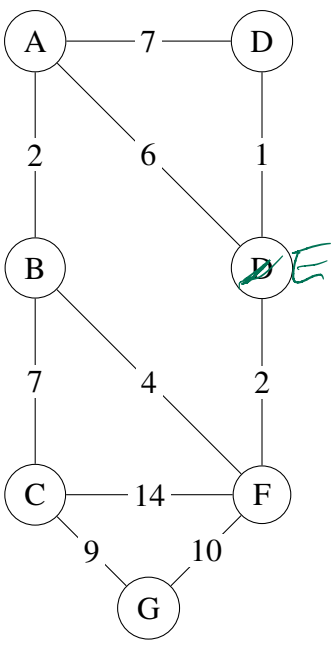

vertex	current/ visited	**tentative** minimum distance to ~~E~~ G	preceding vertex
A	C	~~18~~ 16	~~E~~ B
B	~~C~~ V	~~16~~ 14	~~C~~ F
C	~~C~~ V	9	G
D	~~C~~ V	13	E
E	~~C~~ V	12	F
F	~~C~~ V	10	G
G	~~C~~ V	0	

Length of the shortest path from A to G: 16

Find the shortest path from A to ~~I~~ G. The last column of the table should support your answer.

Path: A B F G